Lightware AV Integration
UCX-HC60 – Yealink A40
Peripheral Validation Report

TABLE OF CONTENTS

1. TEST SUMMARY 3

1.1. INTRODUCTION 3
1.2. TEST CASES 3
1.2.1. Enumeration test 3
1.2.2. Stability test 3
1.2.3. USB tree verification 3
1.3. TEST SCENARIOS 4
1.4. TEST RESULTS 4

2. TEST DETAILS 5

2.1. TEST SETUP 5
2.2. USED DEVICES 5
2.3. USED CABLES 5
2.4. TEST SPECIFICATION 6
2.4.1. Used cables 6
2.4.2. Enumeration test 6
2.4.3. Stability test 6
2.5. TEST REMARKS 6

Version	Comment	Date	Editor
1.0	Initial version	Nov 07, 2025	Péter Krischneider

1. Test summary

1.1. Introduction

This document was created as proof of interoperability between **Lightware UCX-HC60** products and the **Yealink A40**, connected with Lightware cables, verified with tests performed by Lightware AV Integration Team.

If any issues are found during test cycles, those are detailed in the *2. Test details* section.

We distinguish the following test results:

- **Passed** – Both USB peripheral (camera, speaker and microphone) and AV signals (HDMI or DP Alt mode) are reliable, and redirection of the peripheral signal works by the video/USB auto switching
- **Failed** – Either USB peripheral or the AV signal is unstable or not presented at all.
- **Not tested** - The test case cannot be interpreted in the given configuration, e.g. due to lack of HDMI port

1.2. Test cases

1.2.1. Enumeration test

During enumeration test the video, audio and USB crosspoint of the Lightware UCX unit are switched (at the same time) between two available hosts. Between each cycle we verify

- Time of AV signal appearing on the connected Display,
- USB peripheral enumeration speed and reliability,
- USB data availability for video conferencing software (e.g. Microsoft Teams, Zoom, etc.).
- Ethernet and Charging availability through 10m AOC USB-C cable

1.2.2. Stability test

During stability test we perform a long-term test through a conferencing call continuously for 1 hour. During this time, we verify

- the AV signal's continuity and quality,
- if any artifacts appear on the display,
- USB signal stability, latency over time

1.2.3. USB tree verification

As the last step of the verification process we take a USB tree capture via the Lightware USB 1GbE Configurator software using a laptop running Windows OS. With this capture we can verify

- the USB tier count of the signal chain, including the presence of any internal USB hubs in the USB peripheral.
- capabilities of the USB peripheral, including available resolution formats and codec type
- USB standard used (USB2.0 / USB3.0)

1.3. Test scenarios

During validation we performed tests with 3 different Lightware cables between the UCX-HC60 and the USB peripheral:

- **Scenario 1:** CAB-USBC-T300 (3m Full-featured USB-C passive cable with 4k60 Video and 100W/5A charging). **Added USB tiers**: 0 tier
- **Scenario 2:** CAB-USBC-T500B (5m Full featured USB-C passive cable with 4k60 Video and 60W/3A charging). **Added USB tiers**: 0 tier
- **Scenario 3:** CAB-USBC-AOC1000E (10m Active Optical cable with 2 lane HBR3 DP alt mode and 60W/3A charging). **Added USB tiers**: *USB2:* 1 tier; *USB3*: 0 tier

1.4. Test results

USB-04	CAB-USBC-T300C	CAB-USBC-T500B	CAB-USBC-AOC1000E
Enumeration test	Passed	Passed	Passed
Stability test	Passed	Passed	Passed
USB tiers*	Passed	Passed	Passed

*As per USB standard the maximum allowed USB tiers in a system is 7. This includes a USB Host, the USB device, and 5 additional USB Hubs in the USB signal chain.

2. Test details

2.1. Test setup

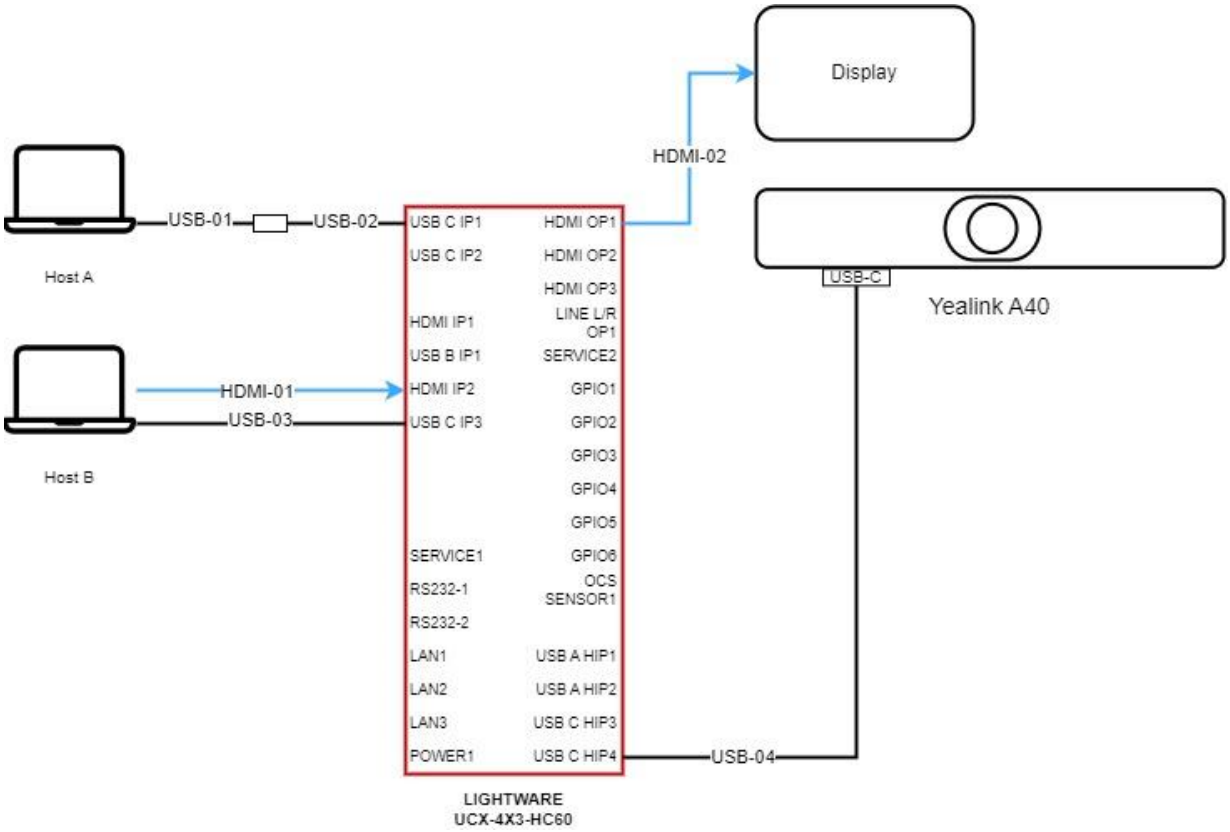

2.2. Used devices

Devices		
Unit	**Type**	**FW/OS version**
USB Peripheral device	Yealink A40	289.320.0.70
Touch:	Yealink CTP25	311.320.0.76
Display:	Samsung S27A800UMP	-
Lightware devices	UCX-4x3-HC60	v2.20.0b12
Host A	MacBook Air 2020 M1	MacOS 15.5
Host B	Lenovo ThinkPad T14	Win10 Pro 19045.5247

2.3. Used cables

USB Cables				
Cable reference	**Cable Name**	**USB2.0 tiers**	**USB3.1 tiers**	**Length (m)**
USB-01	CAB-USBCM-USBCF-L150A	0	0	1.5
USB-02	CAB-USBC-AOC1000E	1	0	10
USB-03	CAB-USBA-USBC300P	0	0	3
USB-04	See Scenario			
USB-05	-	-	-	-

HDMI Cables		
Cable Reference	**Cable Name**	**Length (m)**
HDMI-01	CAB-HDMI20-PHS300P	3
HDMI-02	CAB-HDMI20-PHS300P	3
HDMI-03	-	-

2.4. Test specification

2.4.1. Used cables

- CAB-USBC-T300C has the same technology as the T100A and T200C, but with a longer length. It is a good representation of the other two cables.
- CAB-USBC-T500B at the time of the test is unique in terms of charging capability, while also provides the same video, audio, USB and ethernet capabilities as its shorter alternatives.
- CAB-USBC-AOC1000E at the time of the test is the longest Active Optical USB-C cable in Lightware' s portfolio. It is a good representation of the 8-meter version (CAB-USBC-AOC800E) with the same capabilities.
- On the host side we used the CAB-USBC-AOC1000E cable with the CAB-USBCM-USBCF-L150A port saver cable to give the best possible representation of a real-life environment.

2.4.2. Enumeration test

- AV signal appears on connected display.
- USB enumeration is completed and USB peripheral available.
- Host laptops are receiving network connection continuously through USB-C cable
- Host laptops are charged continuously

2.4.3. Stability test

- Camera image and AV content are continuous and free of any artifacts
- During the 1-hour test duration no additional latency was added to any data stream
- No disconnects experienced for the duration of the test
- Ethernet and Charging are continuous, no drops experienced

2.5. Test remarks

Everything was within specification during tests.

After switching crosspoints between devices, the video appeared in less than 3 seconds, and the USB peripheral became available after approximately 8 seconds.

Switching from crosspoint 0, it took slightly longer for the video to appear – approximately 6-7 seconds.